Open Energy for All

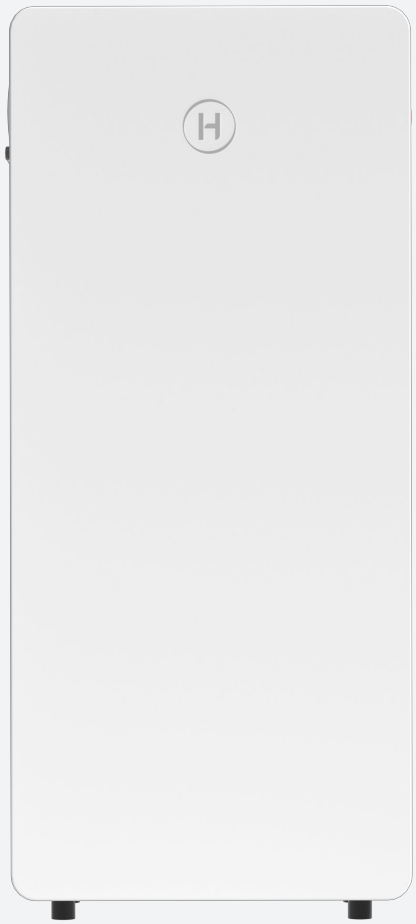

Low Voltage Battery

USER MANUAL

LB-16D-G3

Legal Notice

Hoymiles has made every effort to ensure the accuracy and completeness of this manual. However, this manual may be changed and revised due to product enhancements or user feedback.

Hoymiles reserves the right to modify this manual without prior notice at any given time. The latest version of this manual can be found by visiting the Hoymiles official website ***www.hoymiles.com*** or scanning the QR Code below.

Warranty

Follow the installation instructions in this manual to ensure warranty compliance and reliability. The current warranty conditions can be accessed at ***www.hoymiles.com***.

Contact Information

If you have technical queries or any questions concerning our products, please contact our support through the Hoymiles service portal:

Germany
service.de@hoymiles.com

Spain
service.es@hoymiles.com

France
service.fr@hoymiles.com

Italy
service.it@hoymiles.com

Netherlands
service.nl@hoymiles.com

Norway
service.no@hoymiles.com

Poland
service.pl@hoymiles.com

Finland
service.fi@hoymiles.com

Austria
service.at@hoymiles.com

Rest of the EU
service.eu@hoymiles.com

Australia & New Zealand
service.au@hoymiles.com

Asia & Pacific
service.asia@hoymiles.com

Germany
+49 6994322186

France
+33 159131589

Netherlands
+31 852736388

Poland
+48 918821656

hoymiles.com

Contents

1 About This Manual 1

1.1 Purpose 1
1.2 Audience 1
1.3 Validity 1

2 Safety Information 2

2.1 Safety Symbols 2
2.2 Additional Symbols 2
2.3 Intended Use 3
2.4 Safety Instructions 4
2.5 EU Declaration of Conformity 5

3 Transportation and Storage 6

3.1 Transportation Requirements 6
3.2 Storage Requirements 6

4 Product Introduction 7

4.1 Product Overview 7
4.2 System Diagram 7
4.2.1 Single-Inverter System 7
4.2.2 Multi-Inverter System 8

5 Pre-Installation 9

5.1 Unpacking 9
5.2 Environmental Requirements 10
5.3 Space Requirements 10
5.4 Tools and Materials 10
5.5 Handle Installation 11

6 Mechanical Installation 12

6.1 Floor Standing 12
6.2 (Optional) Wall Mounting 14
6.3 (Optional) Wheel Mounting 15

7 Electrical Connection 17

7.1 Cable Preparation 17
7.2 Copper Busbar Specifications 17
7.3 Single-Inverter System 18
7.3.1 Single-Battery System 18
7.3.2 Multi-Battery System 19
7.4 Multi-Inverter System 20

8 System Commissioning 21

8.1 Preparation 21
8.2 System Power-On 21

9 System Maintenance 22

9.1 System Power-Off 22
9.2 Routine Maintenance 22
9.3 Troubleshooting 22
9.4 LED Indicators 23

10 Decommission 25

10.1 Removing the Battery 25
10.2 Packing the Battery 25
10.3 Disposing of the Battery 25

11 Handling Precautions and Guidelines for Product 26

12 Technical Datasheet 28

1 About This Manual

1.1 Purpose

This manual provides information on the installation, electrical connections, operation, and maintenance of the LB-16D-G3 series battery.

Please consider the following before installation:

- Carefully read this manual before operation.
- Keep this manual for reference.

1.2 Audience

This manual is intended for use by qualified persons only. Qualified persons must have the following skills:

- Knowledge of how a battery works.
- Knowledge of how an inverter works.
- Training in how to deal with the dangers and risks associated with the installation, maintenance, and use of electrical devices.
- Training in the installation, commissioning, and maintenance of electrical devices.
- Knowledge of and compliance with all applicable laws, standards, and directives.

1.3 Validity

This manual is valid for LB-16D-G3.

NOTE

Model identifier:

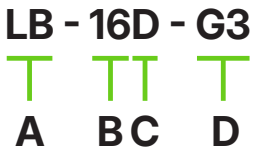

[A]: Series Name (Low Voltage Battery)
[B]: Total Energy (16 kWh)
[C]: Battery Type (Detached Battery)
[D]: Generation (The Third Generation)

© 2026 Hoymiles Power Electronics Inc. All rights reserved.

2 Safety Information

The LB-16D-G3 series battery is designed and tested according to international safety requirements. However, certain safety precautions must be taken while installing, operating, and maintaining the battery. Please carefully read all safety instructions before installation, and observe all these safety instructions.

2.1 Safety Symbols

Safety symbols are used in this manual as follows:

Symbol	Description
DANGER	This symbol indicates potential risks that, if not avoided, may lead to death or serious physical injury.
WARNING	This symbol indicates potential risks that, if not avoided, may lead to personal injury or device damage.
CAUTION	This symbol indicates potential risks that, if not avoided, may lead to device malfunctions or financial losses.
NOTICE	This symbol indicates potential risks that, if not avoided, may lead to minor injury or damage to the equipment.
NOTE	This symbol indicates an important step or tip that leads to the best results but is not safety or damage-related.

2.2 Additional Symbols

The product label contains the following symbols with their meanings described below:

Symbol	Description
	Electric hazard This symbol indicates that there is a danger of electric shock. Failure to pay attention to the procedures, practices, or improper implementation may cause injuries or death.
	Warning This symbol indicates that there is a hazard that could damage the product.
	The product should be stored and installed away from explosive materials.
	Playing around the product is not allowed.
	The product must be stored and installed far from flammable materials.
	Please wear protective goggles when installing, operating, and maintaining the product.
	WEEE Designation Do not dispose of the product together with household waste. Dispose of the product in accordance with local disposal regulations for electronic waste.

© 2026 Hoymiles Power Electronics Inc. All rights reserved.

	CE mark The product complies with the requirements of the applicable EU directives.
	The battery is recyclable. The battery can be recycled by a professional recycling organization. Please refer to the relevant local regulations.
	Observe the documentation. Read and understand all documentation supplied with the product.
	This side up! This package must always be transported, handled, and stored in such a way that the arrows always point upwards.
	Keep dry! The package/product must be protected from excessive humidity and must be stored under cover.
	No more than six (6) identical packages are to be stacked on each other.
	No stepping.

2.3 Intended Use

The LB-16D-G3 series is a BESS which is for residential applications.

- It is a low voltage Li-ion BESS.
- It can be installed indoors. For details, refer to *5.2 Environmental Requirements*.
- It must only be used as stationary equipment.
- Alterations to the product are not allowed unless authorized in writing by the supplier.
- Unauthorized alterations will void the guarantee and warranty claims. Hoymiles will not be liable for any damage caused by such unauthorized alterations.
- It is not suitable for supplying power to life-sustaining medical devices.
- Ensure that there will be no personal injury due to the power outage of the battery system.
- It can only be used in countries where it is approved by battery suppliers.
- It should be used in accordance with the information provided in this document and local applicable standards and directives. Any other application may cause personal injury or property damage.
- The label must be permanently attached to the product.
- The safety instructions in this document are only supplements to local laws and regulations. Please follow local laws and regulations during installation, operation, and maintenance.

© 2026 Hoymiles Power Electronics Inc. All rights reserved.

2.4 Safety Instructions

To prevent personal injury and property damage and to ensure the long-term operation of the product, read this section carefully and observe all safety information at all times. Failure to observe the prescribed instructions may potentially void the manufacturer's warranty. If in doubt, please contact Hoymiles.

⚠ DANGER

Danger to life due to electric shock where surge protection is not used!

If there is no surge protection, a voltage surge can be conducted into the building and to other connected devices in the same system through power cables, network cables, or other cables. Touching live parts and cables may result in death or lethal injury due to electric shock.

- Ensure all devices in the same system and the inverter are integrated with an existing surge protection system or device.
- Install the surge protection device in accordance with local laws and regulations.

⚠ WARNING

Danger to life due to overvoltage!

Overvoltage can damage a measurement device and result in voltage being present in the enclosure of the measurement device. Touching the live enclosure of the measuring device will result in death or lethal injuries due to electric shock.

- Only use measurement devices with a voltage range higher than the system battery voltage.
- Do not touch hot surfaces before it cools down.

Risk of injury due to the weight of the product!

- If the product is lifted incorrectly or dropped while being transported or mounted, it may result in injury.
- Lift and transport the product carefully.
- Wear suitable personal protective equipment, and comply with local regulations during installation, operation, and maintenance.

Fire hazard!

- If the fire is not from the battery or not spread to the battery, please use FM-200 or a carbon dioxide fire extinguisher to put out the fire.
- If the battery pack catches fire, do not attempt to put out the fire and evacuate immediately. Keep damaged batteries isolated and call the local fire department. Immediately seek medical in case of breathing in toxic fumes.

Keep away from water!

- Keep the battery packs away from water. If any part of the battery system is submerged, there is a risk of electric shock and internal short-circuit.
- Do not reuse the battery if it has been submerged in water.

NOTICE

Damage to the battery system due to electrostatic discharge!

- Internal components of the battery system can be irreparably damaged by electrostatic discharge.
- Ground yourself before touching any component.

© 2026 Hoymiles Power Electronics Inc. All rights reserved.

2.5 EU Declaration of Conformity

Hoymiles Power Electronics Inc. hereby declares that the battery described in this document is in compliance with the basic requirements and other relevant provisions of the following directives.

- Electromagnetic Compatibility Directive 2014/30/EU (EMC)
- Restriction of the use of certain hazardous substances Directive 2011/65/EU and its amendment directives (EU) 2015/863 (RoHS)
- EU Battery Regulation (EU) 2023/1542.

More detailed information can be found at *https://www.hoymiles.com*.

© 2026 Hoymiles Power Electronics Inc. All rights reserved.

3 Transportation and Storage

3.1 Transportation Requirements

Category	Requirements
Compliance	The battery has been certified to UN 38.3 and passed related tests. As it is classified as class 9 dangerous goods, it must be transported in accordance with specific regulations.
Method and Condition	• Batteries must be transported separately. • Ensure that the packages, labels, and other markings are correct and intact before and during transportation. • In case of falling down, keep the battery upright during transportation. • The battery should be carefully transported to avoid short circuits, damage, fire, or explosion, and to ensure personal safety. • Do not hold the terminals or cables to move a battery.
Personnel Safety	• Personnel working with batteries must be well trained in proper lifting and handling procedures. • Wear personal protective equipment when handling the batteries. • Pay attention to the weight of the product to avoid injury when handling the product.

3.2 Storage Requirements

If the battery is not installed immediately after delivery, store it as described below.

Category	Requirements
Environment	• Recommended storage temperature: 15 °C to 35 °C. • Relative humidity: 10% to 95% (non-condensing). • Good ventilation and heat dissipation. • Away from direct sunlight and bad weather such as rain, snow, or lightning. • Away from heat sources, corrosive chemicals, and highly flammable materials or gases.
Method and Condition	• Keep the battery in its original packaging until it is ready for installation. • The package with the battery shall not be tilted or inverted. • Do not place any objects on the top of the battery pack.
Maintenance	• If the battery has been stored for 3 months or longer, it must be fully inspected and tested by authorized personnel before it can be put into operation. • Perform battery maintenance at least once every 6 months. • Professionals should regularly check whether the cables are loose, and clean the surface of the system. If any defects are found, contact the dealer in time.
Charging Strategy	• Before storage, charge the battery to 100%, then discharge it to 50%, and power it off. • Recharge the battery every 6 months during storage. Keep the battery SOC at 45% to 50% and disconnect the battery output to prevent deep discharge. • If the battery is fully discharged, recharge it within the following time limits. - At 45°C-50°C: recharge within 7 days. - At 35°C-45°C: recharge within 15 days. - Below 35°C: recharge within 30 days.

© 2026 Hoymiles Power Electronics Inc. All rights reserved.

4 Product Introduction

4.1 Product Overview

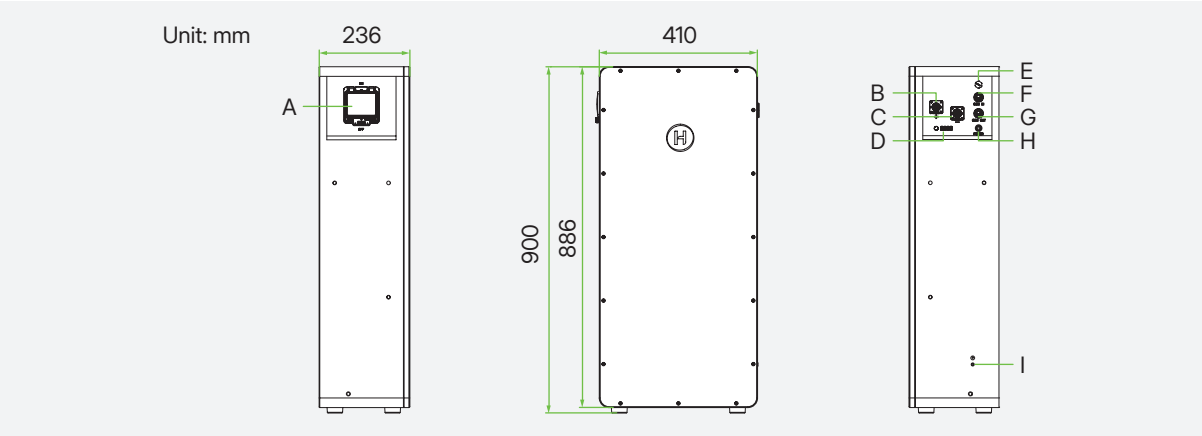

No.	Description	No.	Description	No.	Description
A	DC Circuit Breaker	D	LED Indicators	G	COM OUT
B	Positive Terminal	E	Relief Valve	H	Power Button
C	Negative Terminal	F	COM IN	I	Ground Terminal

4.2 System Diagram

4.2.1 Single-Inverter System

Single-Battery System

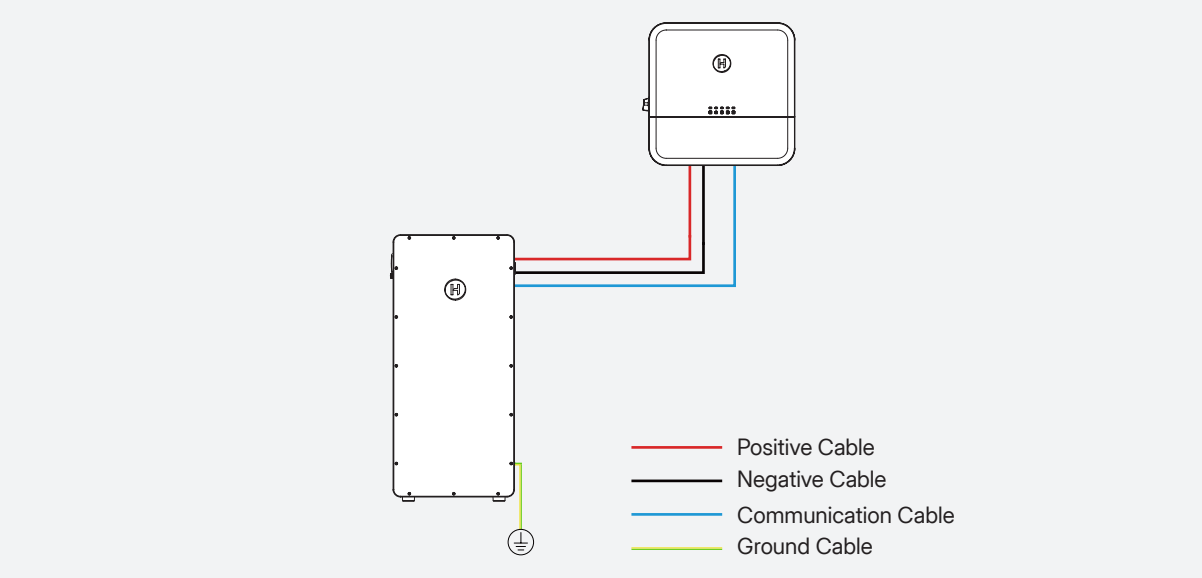

NOTE

The maximum charging or discharging current of the battery is 157 A.

© 2026 Hoymiles Power Electronics Inc. All rights reserved.

Multi-battery System

When connected in parallel, the batteries must be connected through a copper busbar. For recommended copper busbar specifications, refer to *"7.2 Copper Busbar Specifications"*.

NOTE

The LB-16D-G3 series supports up to 16 batteries in parallel.

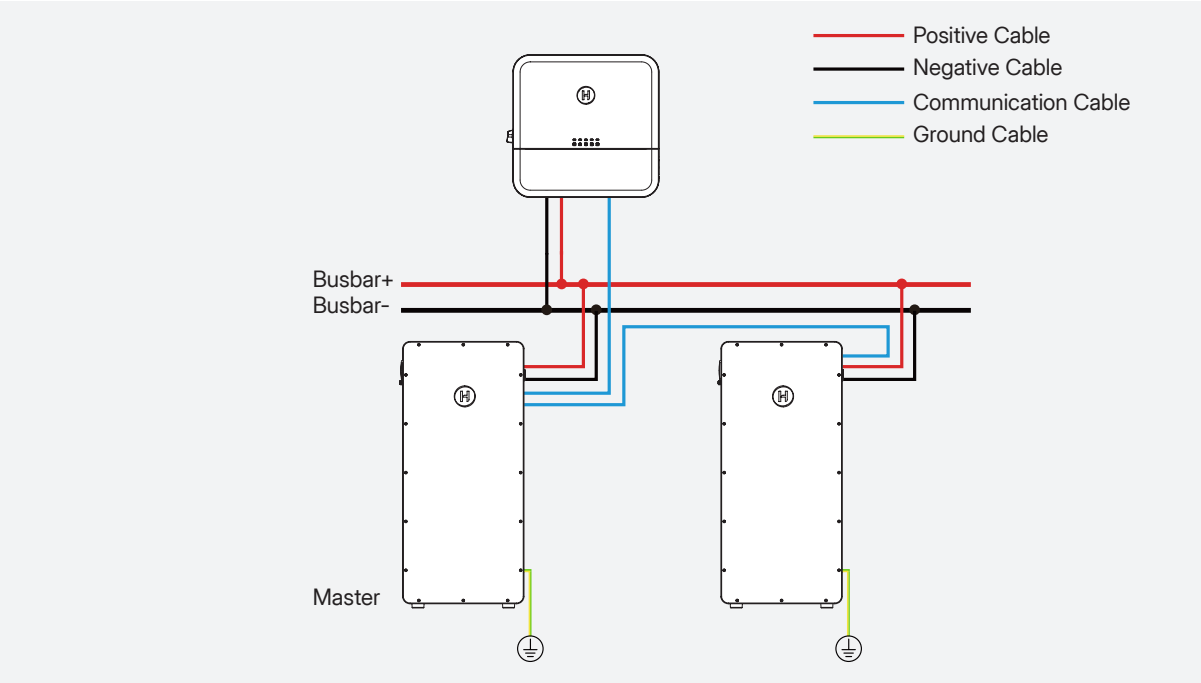

4.2.2 Multi-Inverter System

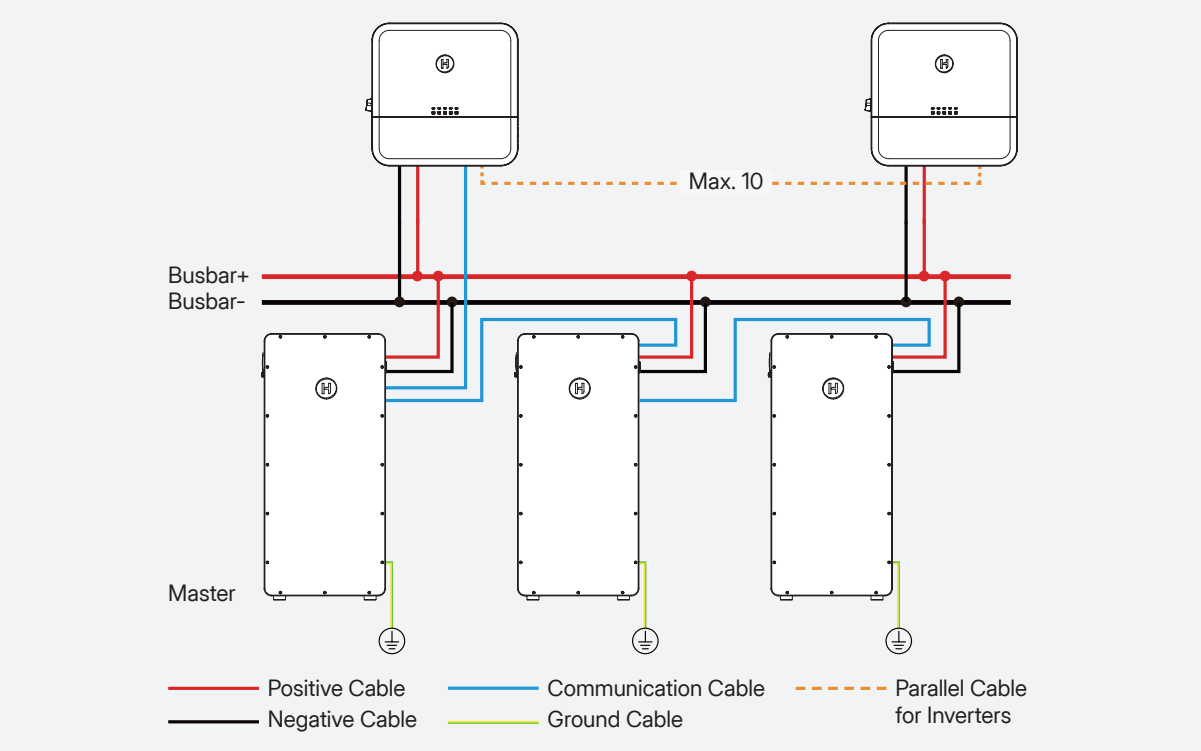

NOTE

The LB-16D-G3 series supports up to 16 batteries in parallel.

© 2026 Hoymiles Power Electronics Inc. All rights reserved.

5 Pre-Installation

⚠ DANGER

Danger to life due to fire or explosion!

- Despite careful construction, electrical devices can cause fires. This can result in death or serious injury.
- Do not mount the product in places containing highly flammable materials or gases.
- Do not mount the product in places where there is a risk of explosion.

5.1 Unpacking

Unpack the package and carefully take out the battery and accessories. Check that the deliverables are complete and intact. If the components are missing or damaged upon receipt of the product, contact your supplier.

Standard

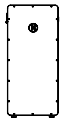
Battery*1

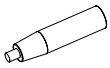
Handle*4

Bracket A*2

Feet*4

Positioning Board*1

Expansion Screw M8*80*2

Screw M8*16*2

Screw M5*14*4

Screw M4*10*1

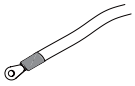
Ground Cable*1 (1 m)

Power Cable*2 (1.5 m)

*
Communication Cable*2

Waterproof RJ45 Connector*2

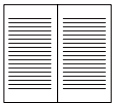
Installation Guide*1

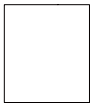
Certificate*1

ⓘ NOTE

The two communication cables are in different lengths. The 1 m cable is for battery parallel connection, and the 1.5 m cable is used to connect the battery to the inverter.

Optional

For wall-mounting:

Bracket L*1
Bracket R*1

Expansion Screw M8*80*4

Screw M8*16*2

For wheel-mounting:

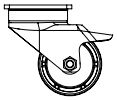
Caster without Brake*2

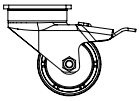
Caster with Brake*2

Screw M6*14*16

© 2026 Hoymiles Power Electronics Inc. All rights reserved.

5.2 Environmental Requirements

Category	Requirements
Operating temperature	-20 °C to 55 °C
Relative humidity	10% to 95% (non-condensing)
Altitude	≤ 2000 m
Ventilation	Good ventilation and heat dissipation required.
Clearance	Away from doors, windows, and other batteries.
Hazards	Away from heat sources, corrosive chemicals, and highly flammable materials or gases.
Location	• On a solid surface such as concrete or masonry. • Inaccessible to children. • Suitable for the weight and dimensions of the battery.

5.3 Space Requirements

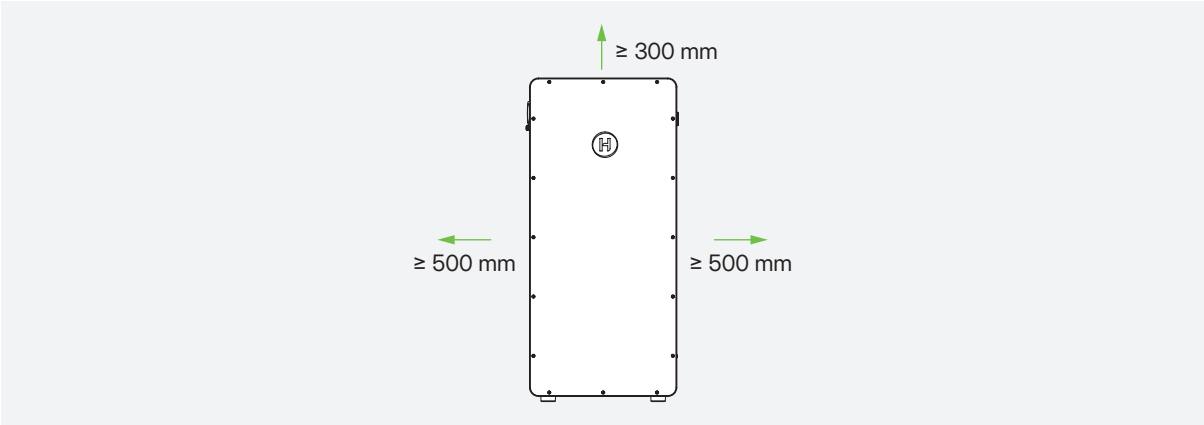

NOTE

The installation space should be determined based on the local installation standards.

5.4 Tools and Materials

Tools

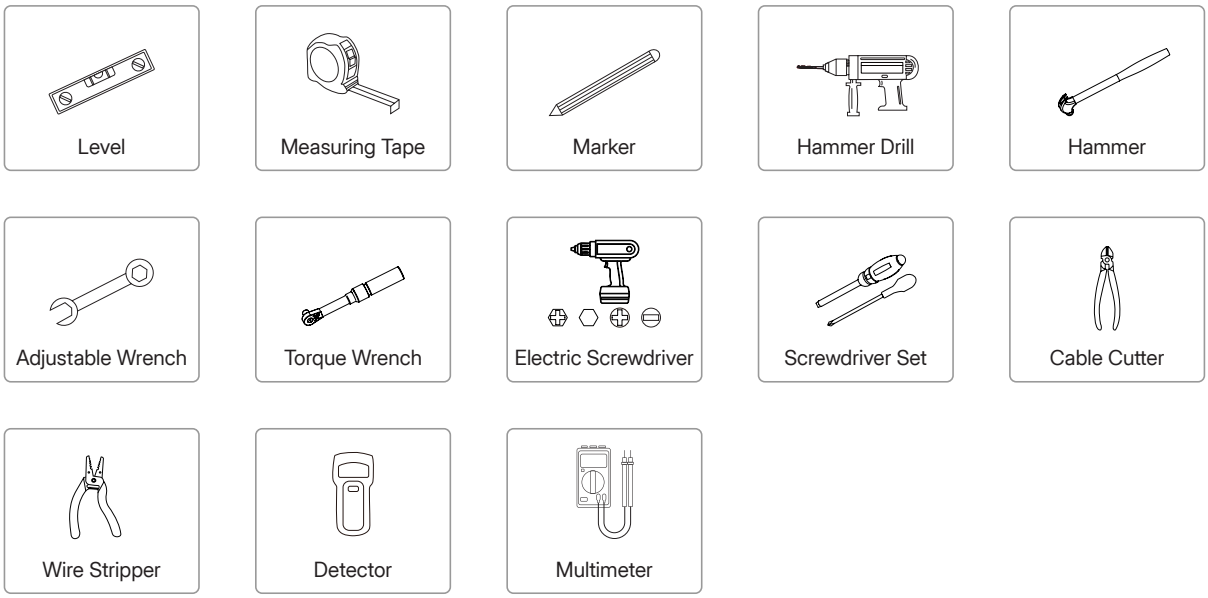

© 2026 Hoymiles Power Electronics Inc. All rights reserved.

Personal Protective Equipment (PPE)

5.5 Handle Installation

⚠ WARNING

The battery is heavy. Use handles and at least four people to prevent injury!

Before you move the battery, install the handles on the enclosure holes, as shown below.

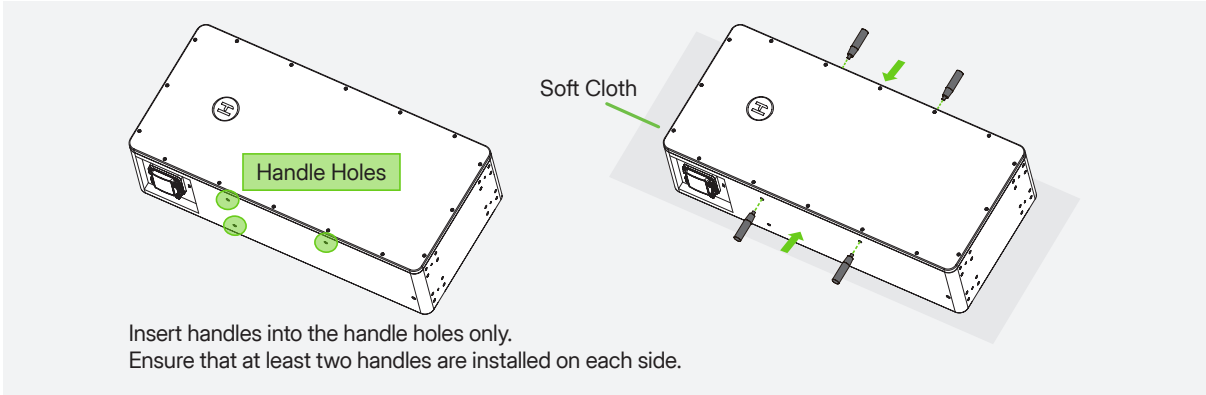

© 2026 Hoymiles Power Electronics Inc. All rights reserved.

6 Mechanical Installation

6.1 Floor Standing

Step 1: Mark drilling positions.

a. Select a load bearing wall constructed with reinforced concrete and use a detector to verify that no electrical wiring or plumbing are present.

b. Place the positioning board ("Floor standing" side) on the ground and against the wall. Ensure that the ground is level (0°-3°).

c. Mark drilling positions (marked by "L" and "R").

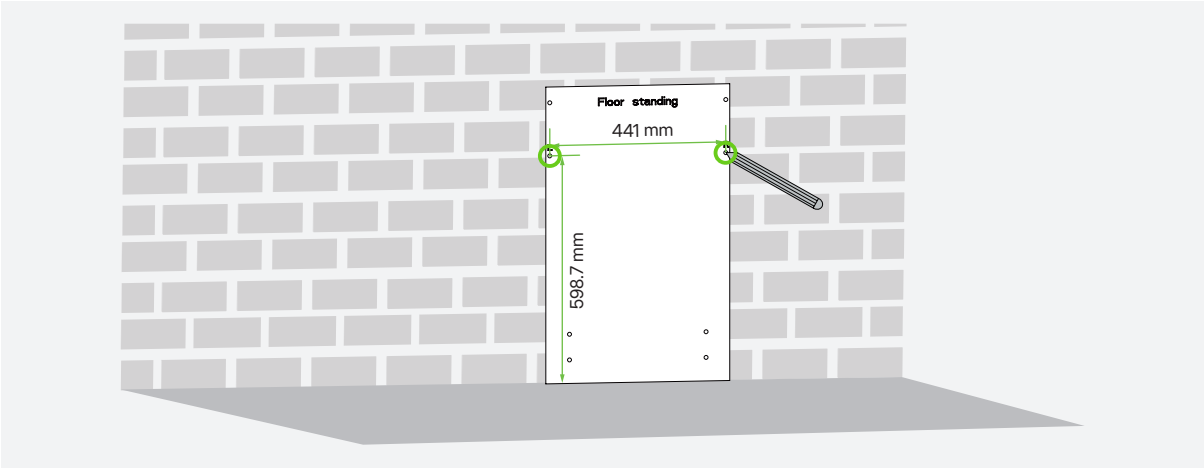

Step 2: Install the expansion sleeves.

a. Drill holes, each 12 mm in diameter and 65 mm deep.

b. Hammer the expansion screws into the holes until the washers are flush with the surface.

c. Fasten each screw clockwise until the sleeve expands and grips the wall firmly.

d. After the sleeve expands, unscrew and remove the washer and screw.

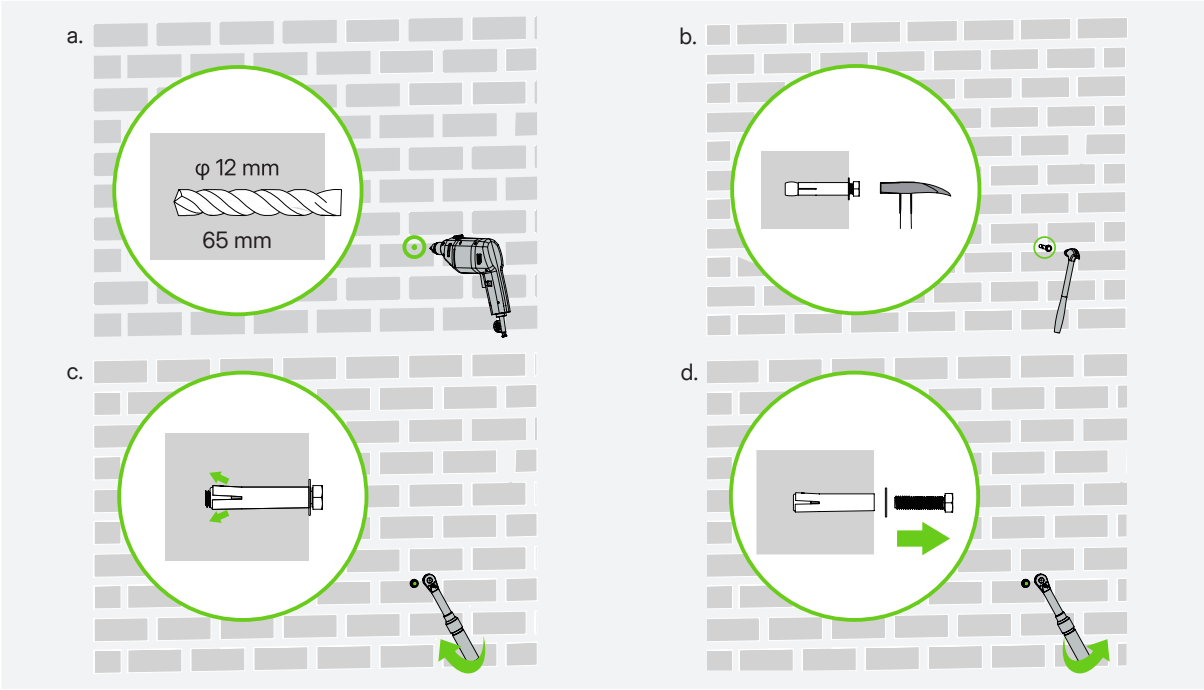

© 2026 Hoymiles Power Electronics Inc. All rights reserved.

Step 3: Install the feet.

a. Place a soft cloth on the ground. Hold the handles to slowly lay the battery on the cloth.

b. Secure the 4 feet.

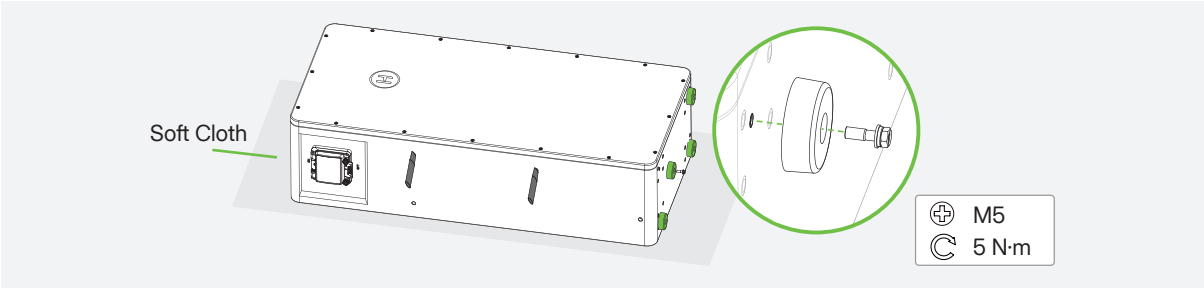

Step 4: Secure the battery to the wall.

a. Lift the battery up and align it with the wall. Leave 20 mm between the battery and the wall.

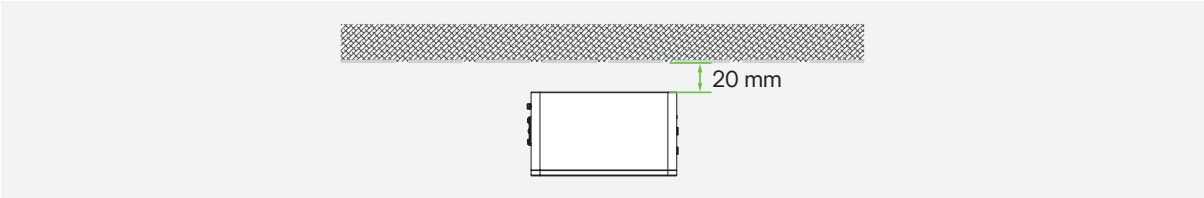

b. Secure the two bracket A to the battery.

c. Align the brackets with the installed sleeves and use the expansion screws to secure the brackets to the wall.

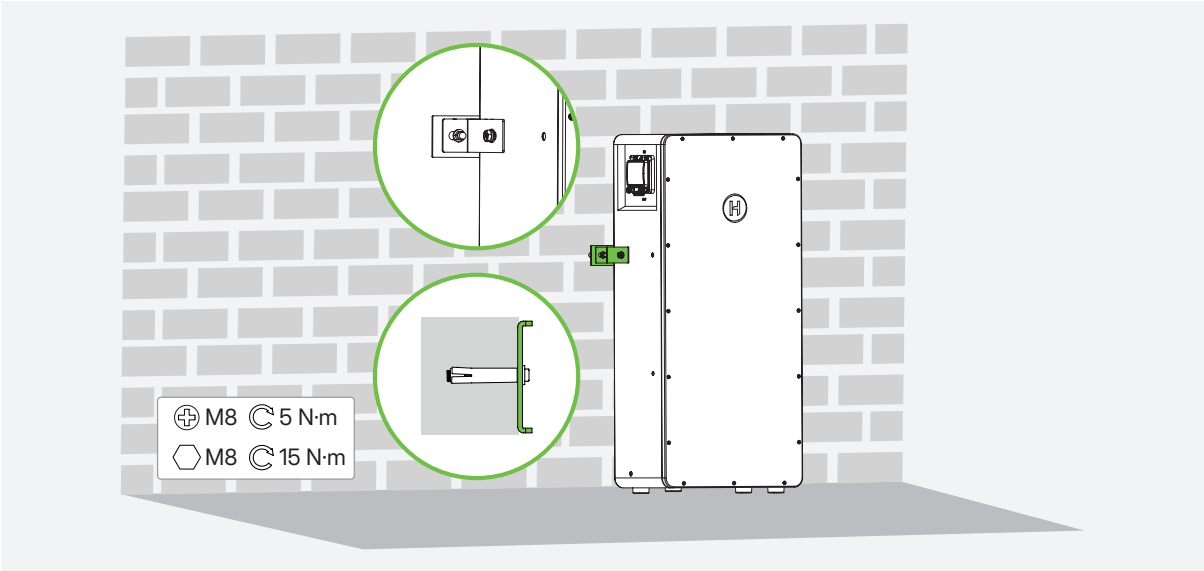

© 2026 Hoymiles Power Electronics Inc. All rights reserved.

6.2 (Optional) Wall Mounting

Step 1: Mark drilling positions.

a. Select a load bearing wall constructed with reinforced concrete and use a detector to verify that no electrical wiring or plumbing are present.

b. Place the positioning board ("Wall mounting" side) against the wall and mark drilling positions (marked by "L" and "R").

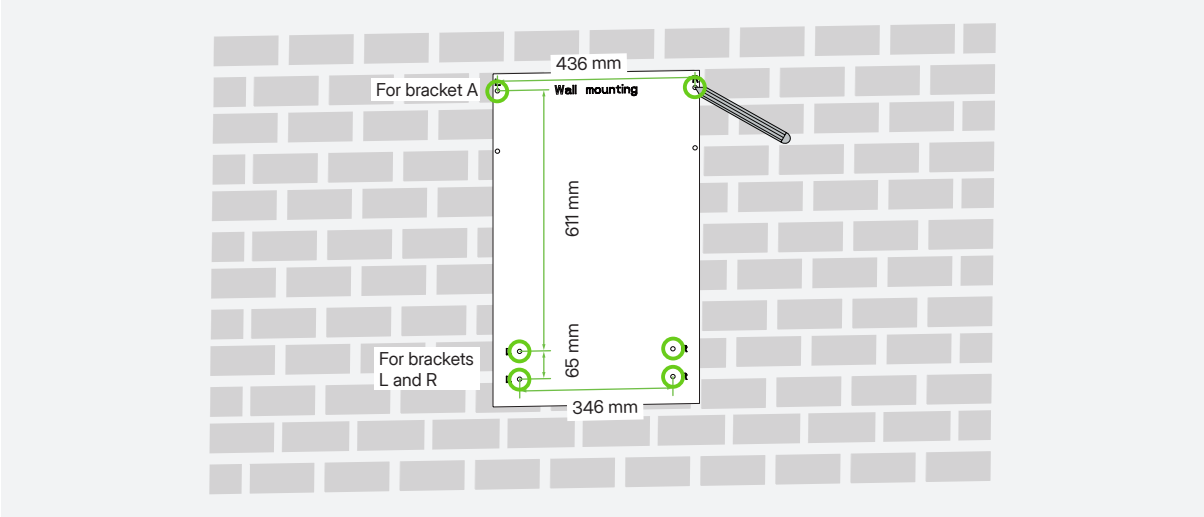

Step 2: Install the expansion sleeves.

For details, see the *step 2* of "6.1 Floor Standing".

Step 3: Secure the brackets to the wall.

Align the bracket L and bracket R with the installed sleeves and secure them using the expansion screws.

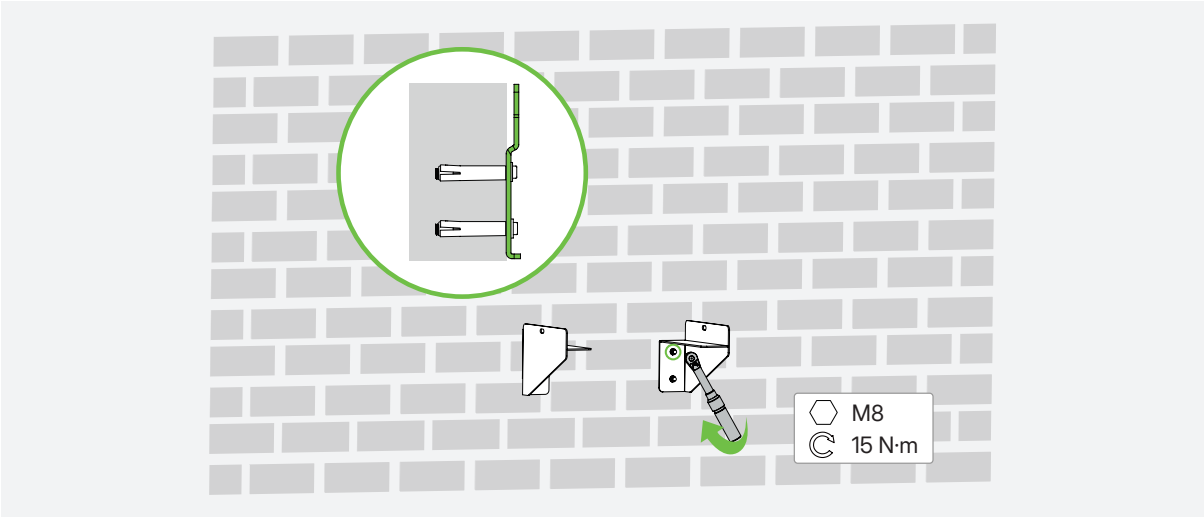

Step 4: Secure the battery to the wall.

> **NOTE**
>
> Before you tighten the brackets, ensure that the battery is aligned with the wall.

a. Lift the battery via the handles and place it on the bracket L and bracket R.

b. Tighten the screws to secure the battery to the bracket L and bracket R.

c. Secure the two bracket A to the battery.

d. Align the brackets with the installed sleeves and use the expansion screws to secure the brackets to the wall.

© 2026 Hoymiles Power Electronics Inc. All rights reserved.

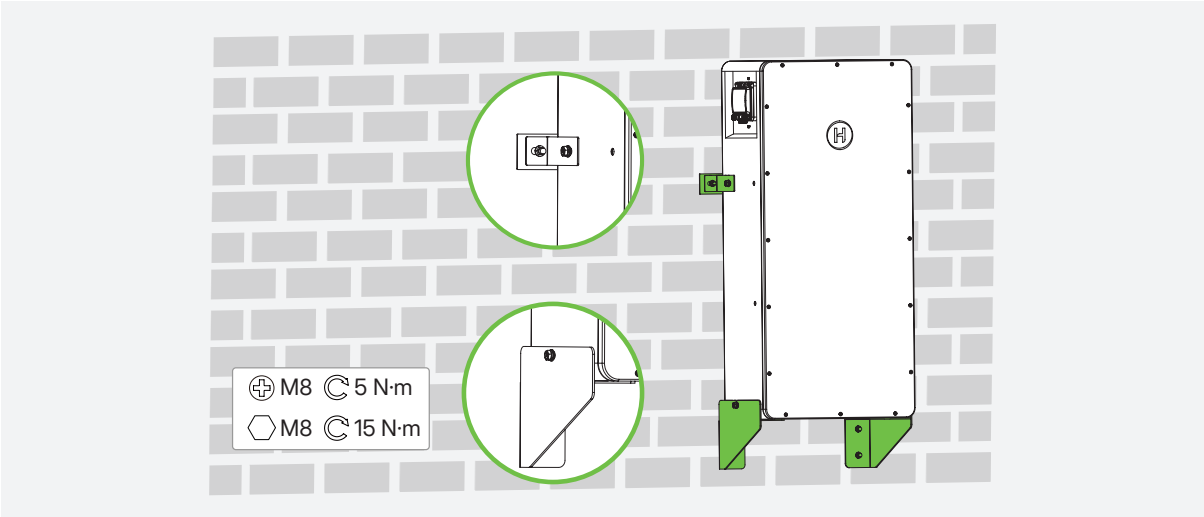

6.3 (Optional) Wheel Mounting

Step 1: Install the casters.

a. Place a soft cloth on the ground. Hold the handles to slowly lay the battery on the cloth.

b. Secure the 4 casters. Install the two casters with brakes at the front side of the battery.

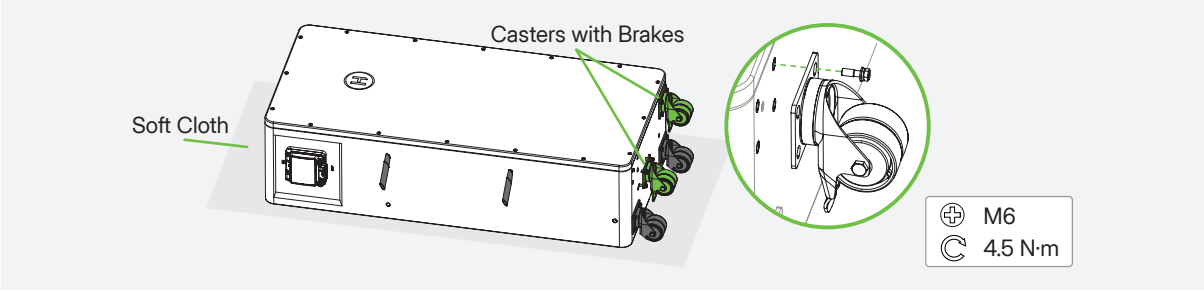

Step 2: Secure the battery to the wall.

a. Select a load bearing wall constructed with reinforced concrete and use a detector to verify that no electrical wiring or plumbing are present. Ensure that the ground is level (0°-3°).

b. Lift the battery up via the handles and secure the two bracket A to it.

c. Align the battery with the wall and make the two bracket A flush against the wall.

d. Mark drilling positions for the two brackets. Then, move the battery away from the drilling area.

e. Install the expansion sleeves. For details, see the *step 2* of "6.1 Floor Standing".

f. Move the battery back. Align the brackets with the installed sleeves and use the expansion screws to secure the brackets to the wall.

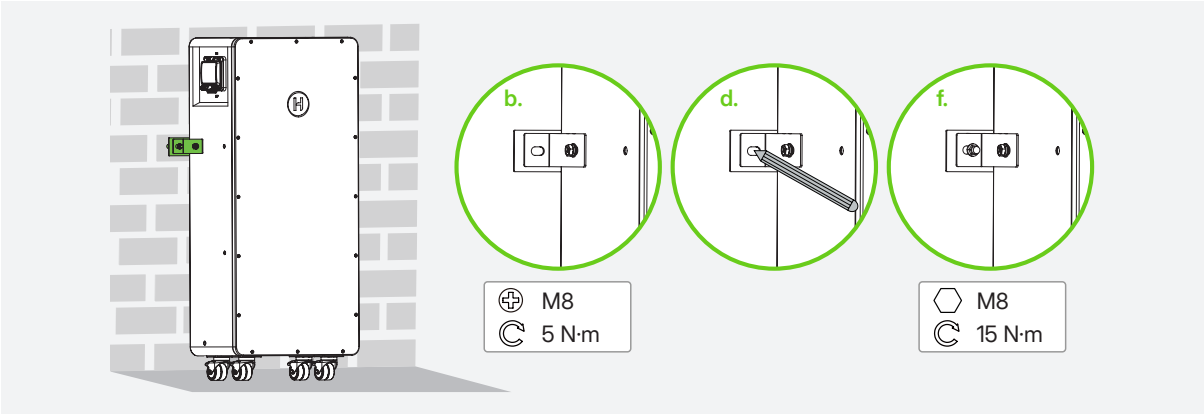

© 2026 Hoymiles Power Electronics Inc. All rights reserved.

NOTICE

Push the battery from the sides, not from the front or rear, to prevent it from toppling

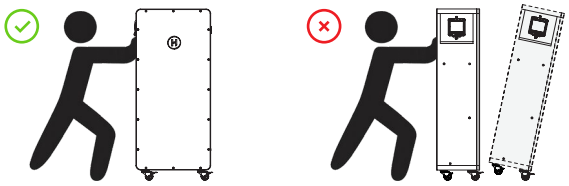

Step 3: Lock the brakes.

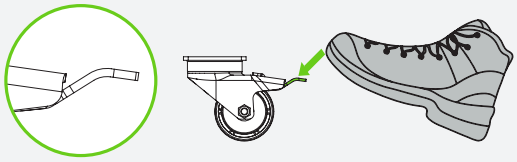

© 2026 Hoymiles Power Electronics Inc. All rights reserved.

7 Electrical Connection

⚠ WARNING

Before the electrical connection, disconnect all power suppliers. Ensure that the circuit breaker and all switches connected to the energy storage system are OFF. Otherwise, an electric shock may occur.

7.1 Cable Preparation

The system requires ground cable, power cable, and communication cable for electrical connection. These cables are supplied with the battery.

If you want to use cables prepared by yourself, choose the cable specifications as follows.

- **Ground cable:** 6 mm² / 10 AWG.
- **Power cable:** 1 AWG.
- **Communication cable:** standard Ethernet cable. For the cable end connected to the inverter, reserve only pins 4 (CAN1H) and 5 (CAN1L). The pin definition is as follows:

Terminal	1	2	3	4	5	6	7	8
12345678 COM IN	485-1A	485-1B	485-2A	CAN1H	CAN1L	485-2B	DI	GND1
12345678 COM OUT	485-1A	485-1B	485-2A	NC	NC	485-2B	DO	GND1

7.2 Copper Busbar Specifications

When connected in parallel, the batteries must be connected through a copper busbar. The recommended copper busbar specifications are listed below. Always comply with local laws and regulations.

Number of Batteries	Rated Current (A)	Width (mm)	Thickness (mm)
2	314	25	5
3	471	38	5
4	628	51	5
5	785	65	5
6	942	85	5
7	1099	70	10
8	1256	80	10
9	1413	90	10
10	1570	95	10
11	1727	110	10
12	1884	120	10
13	2041	125	10
14	2198	135	10
15	2355	145	10
16	2512	160	11

© 2026 Hoymiles Power Electronics Inc. All rights reserved.

7.3 Single-Inverter System

7.3.1 Single-Battery System

⚠ WARNING

- Before wiring, check that all circuit breakers are in the OFF position.
- The maximum charging or discharging current of the battery is 157 A.

Step 1: Use the ground cable to connect the battery to the ground.

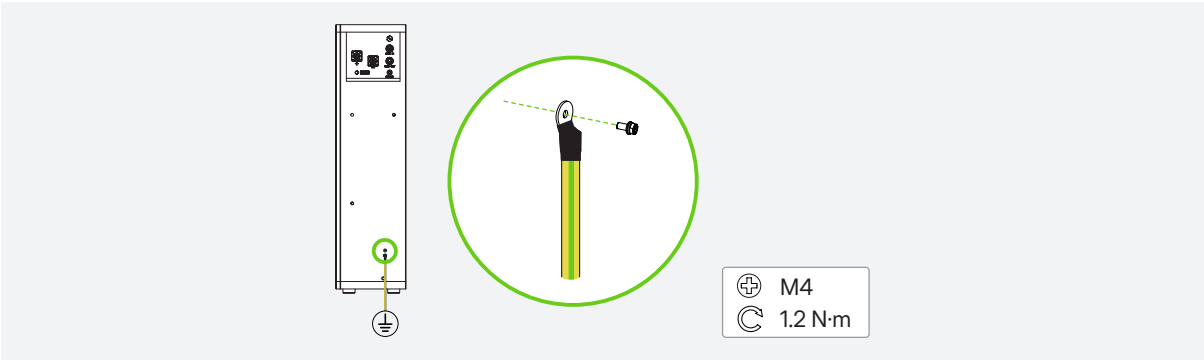

Step 2: Connect the power cables.

Connect one end of the power cables respectively to the battery's positive and negative terminals, and the other end to the inverter.

Step 3: Connect the communication cable.

Take the 1.5 m communication cable and plug one end marked INV to the inverter communication port and the other end marked BAT to the battery COM IN port.

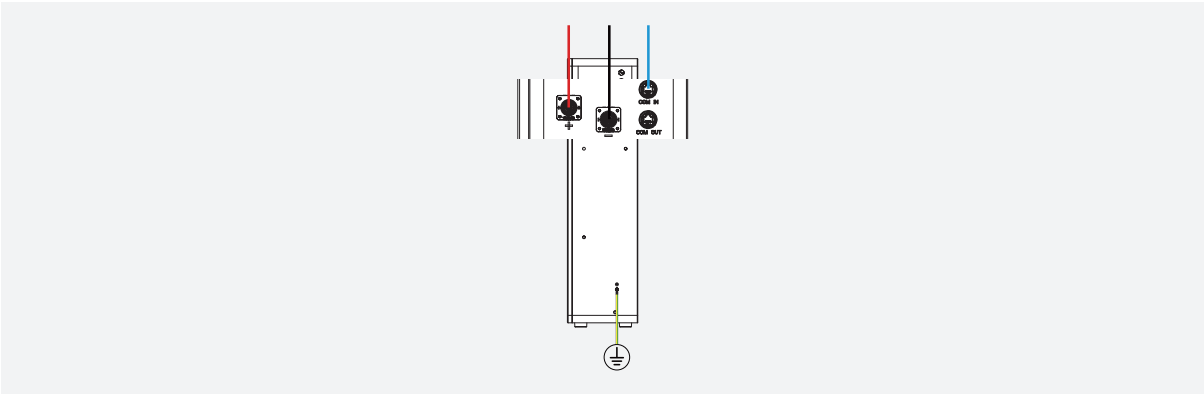

© 2026 Hoymiles Power Electronics Inc. All rights reserved.

7.3.2 Multi-Battery System

⚠ WARNING

Before wiring, check that all circuit breakers are in the OFF position.

ⓘ NOTE

The LB-16D-G3 series supports up to 16 batteries in parallel.

Step 1: Use the ground cable to connect the battery to the ground.

For details, see the *step 1* in "7.2.1 Single-Battery System".

Step 2: Connect the power cables to the busbar.

For busbar specifications, see *"7.2 Copper Busbar Specifications"*.

Step 3: Connect the communication cables.

a. Take the 1.5 m communication cable and plug one end marked INV to the inverter communication port and the other end marked BAT to the master battery COM IN port.

b. Take the 1.0 m communication cable and plug one end marked COM OUT to the master battery COM OUT port and the other end marked COM IN to the slave battery COM IN port.

c. Repeat step b until all slave batteries are connected.

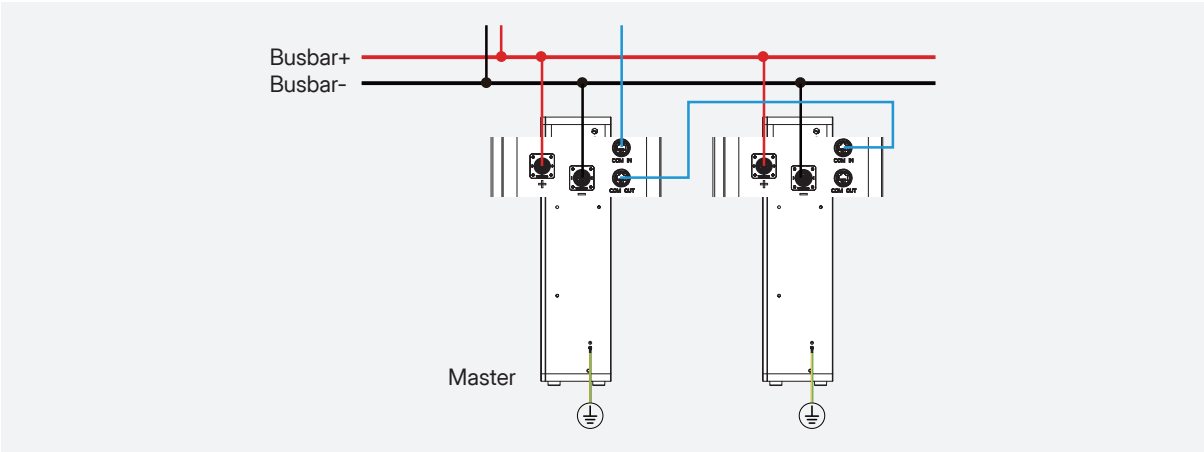

© 2026 Hoymiles Power Electronics Inc. All rights reserved.

7.4 Multi-Inverter System

⚠ WARNING

Before wiring, check that all circuit breakers are in the OFF position.

ⓘ NOTE

The LB-16D-G3 series supports up to 16 batteries in parallel.

Step 1: Use the ground cable to connect the battery to the ground.

For details, see the *step 1* in "7.2.1 Single-Battery System".

Step 2: Connect the power cables to the busbar.

For busbar specifications, see *"7.2 Copper Busbar Specifications"*.

Step 3: Connect the communication cables.

a. Take the 1.5 m communication cable and plug one end marked INV to the inverter communication port and the other end marked BAT to the master battery COM IN port.

b. Take the 1.0 m communication cable and plug one end marked COM OUT to the master battery COM OUT port and the other end marked COM IN to the slave battery COM IN port.

c. Repeat step b until all slave batteries are connected.

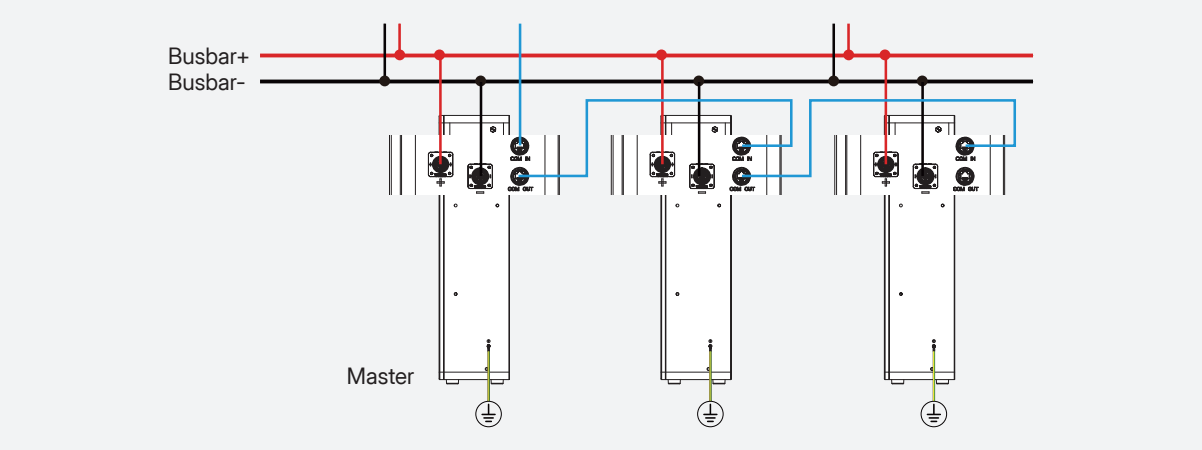

© 2026 Hoymiles Power Electronics Inc. All rights reserved.

8 System Commissioning

8.1 Preparation

Before the commissioning of the product, make sure:

- The power switch and external circuit breaker are disconnected.
- The wiring follows the instructions in *7 Electrical Connection*.
- Unused terminals must be sealed using corresponding sealing plugs.
- Nothing is left on the top of the inverter and battery.
- Cables are routed in a safe place or protected against mechanical damage.
- Warning signs and labels are intact.

8.2 System Power-On

NOTICE

Ensure that all cables are connected correctly and firmly.

Step 1: Unscrew the screws on the switch guard and open it.

Step 2: Turn on the DC circuit breaker.

Step 3: Press the POWER button for 3 seconds.

- For a single-battery system, press the POWER button on that battery.
- For a parallel system, press the POWER button on the master battery.

The status indicator will be solid blue, and the SOC indicators will flash blue (0.5 s gap), indicating the battery is in self-check state.

NOTE

For parallel-connected batteries, if the first parallel operation fails, it may be caused by inconsistent SOC among the batteries. To solve the problem, check the voltage of each battery. If the voltage difference exceeds 0.5 V, set the battery with the lowest voltage as the Master, and enable the force charging mode to charge the battery at a maximum power of 10% until the parallel operation is successful.

© 2026 Hoymiles Power Electronics Inc. All rights reserved.

9 System Maintenance

9.1 System Power-Off

Step 1: Press the POWER button.

For a single-battery system, press the POWER button for 3 s.
For a parallel system, press the POWER button on the Master battery for 3 s.

Step 2: Turn off all DC circuit breakers.

9.2 Routine Maintenance

To ensure long-term battery performance, perform the following maintenance procedures. Ensure that all maintenance activities are carried out.

Category	Method	Maintenance Interval
System Cleanliness	• Check whether the battery is damaged or deformed. • Clean the system.	Once every 6 to 12 months
System Operation Status	• Check whether there is abnormal sound during operation. • Check whether the indicator works normally. • Check whether the system parameters are set correctly. • Update the software.	Once every 6 months
Electrical Connection	• Check whether the cables are firmly connected and intact. Ensure that the parts touching the metal surface are not scratched. • Check whether the cable is discolored.	• First inspection: 6 months after the initial commissioning • Subsequent inspections: Once every 6 to 12 months.
Grounding Reliability	Check whether the ground cables are firmly connected.	

9.3 Troubleshooting

Fault	Possible Causes	Suggestions
The power switch has no response.	• The switch is broken. • The cables are damaged or not properly connected.	Contact the supplier to repair or replace the battery.
The discharge time decreases abnormally.	The battery capacity is insufficient.	Charge the battery until it is fully charged.
	Low ambient temperature.	Ensure that the battery works within the recommended temperature range.
	Overload.	Check the load status and remove non-essential loads.
	Battery aging and capacity fading.	Contact the supplier to replace the battery.

© 2026 Hoymiles Power Electronics Inc. All rights reserved.

The battery is unable to charge and discharge.	The battery is discharged to the protection SOC.	The battery should be charged to a value greater than the discharge protection SOC.
	Overvoltage protection.	Log in to the S-Miles Installer App, view the fault information, and contact the supplier.
	Undervoltage protection.	
	Overtemperature protection.	
	Undertemperature protection.	
	Internal fault.	
After the system is started, the indicators are not on or are abnormal.	The battery SOC is low.	Log in to the S-Miles Installer App to check if the SOC is low. If so, contact the supplier to forcibly charge the battery.
	The indicators are damaged.	Contact the supplier to repair or replace the battery.
Battery communication is abnormal.	The communication is disconnected.	• Check whether the battery is installed reliably. • Check whether the battery is abnormal through the indicator status.
The status indicator is solid red.	Other faults.	Log in to the S-Miles Installer App, view the fault information, and contact the supplier.
The battery doesn't work.	• The battery voltage is too low. • The battery SOC is lower than the shutdown protection value.	After the inverter is connected to the grid, charge the battery.

9.4 LED Indicators

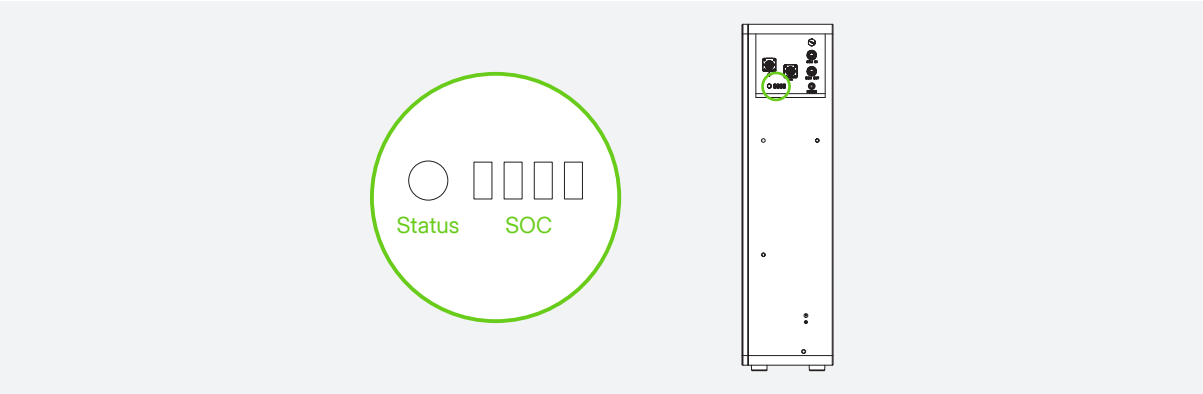

Indicator		Indicator Status	Battery Status
Status		Solid blue	• The battery works normally. • The battery is in standby.
		Solid red	A fault occurs.
SOC		1/4 LED on	SOC is 0-25%.
		2/4 LEDs on	SOC is 25%-50%.
		3/4 LEDs on	SOC is 50%-75%.
		All LEDs on	SOC is 75%-100%.

© 2026 Hoymiles Power Electronics Inc. All rights reserved.

SOC		Flashing blue in a rightward sequence	The battery is charging.
		Flashing blue in an leftward sequence	The battery is discharging.
All		Status indicator solid blue, SOC indicators flashing blue (0.5 s gap)	• The battery is in precharge. • The battery is in self-check. • The battery is being upgraded.
		Status indicator solid red, SOC indicators flashing blue (0.5 s gap)	Communication failure occurs.
		Off	The battery is turned off.

© 2026 Hoymiles Power Electronics Inc. All rights reserved.

10 Decommission

10.1 Removing the Battery

Step 1: Power off the battery as described in *9.1 System Power-Off*.

Step 2: Disconnect all cables.

Step 3: Remove the battery and the brackets from the wall.

10.2 Packing the Battery

- If the original package is available, put the battery and its accessories into the package. Keep them in a dry and proper place.
- If the original package is not available, put the battery and its accessories into a suitable package. The package should be easy to remove, can bear the weight of the product, and can be sealed properly.

10.3 Disposing of the Battery

Disposal of the system must comply with applicable local regulations for the disposal of electronic waste and used batteries.

- Do not dispose of the battery system with your household waste.
- Avoid exposing the battery to high temperatures or direct sunlight.
- Avoid exposing batteries to high humidity or corrosive environments.

For more information, contact the original manufacturer.

© 2026 Hoymiles Power Electronics Inc. All rights reserved.

11 Handling Precautions and Guidelines for Product

These Handling Precautions and Guidelines for Rechargeable Battery System ("Handling Precautions and Guidelines") shall only apply to the packs manufactured by Hoymiles. Customers shall strictly follow these Handling Precautions and Guidelines, and shall alert its customers, contract manufacturers, agents, distributors, service providers, and end-users of the risks of the packs. Customers should also ensure that they observe their obligations as specified in the document and the handling precautions and guidelines. Detailed information is available on the printed label of the product, a quick installation guide, a help file, or an official website. The entire chain including customers, distributors, and end-users should be committed to these obligations so that the product can be properly handled, transported, installed, operated, and maintained.

Statement (1):

Customers are requested to contact Hoymiles in advance, if and when customers need other applications or operating conditions other than those described in this document. Additional experimentation may be required to verify performance and safety under such conditions.

Statement (2):

Hoymiles will take no responsibility for any accidents in the event the product is used for applications or under conditions other than those described in this document.

- Use the product under specified charge/discharge conditions.
- Do not immerse the product in water.
- Do not heat the product.
- Do not attempt to crush, drop, or penetrate the product.
- Do not attempt to have any modifications.
- Leave the product in cool places.
- Stop using the product with any color change or mechanical damage detected during assembly, charging, normal operation, and storage.
- In case of leakage or smells, track to the thermal source, remove the thermal source, and clean it with water.
- Do not place or leave the pack and equipment in the reach of the children.
- Keep leaked electrolytes away from the eyes or skin. In case of leakage contact with eyes or skin, immediately clean with water and seek help from a doctor. Serious damages can be caused due to delayed treatment.
- Do not put the pack into a fire. Do not use it or leave it in a place near fire, heaters, or high-temperature sources. The heat can melt the pack insulator and damage the safety vent, resulting in overheating, explosion, or fire of the pack.
- Do not submerge the product in water or wet the product. If the protective devices are damaged, abnormal charging current and voltage may cause a chemical reaction within the product, which may result in overheating, explosion, or fire of the pack.
- Do not reversely connect the positive (+) and negative (-) terminals of the product.
- Do not contact the product terminals (+ and -) directly with a wire or any metal (like a metal necklace or a hairpin). Otherwise, the product will be short-circuited and generate excessive current, which may result in the overheating, explosion, or fire of the pack.
- Do not throw or drop the pack. Strong impact may damage the protective devices, and an abnormal chemical reaction might occur during charge, resulting in overheating, explosion, or fire of the pack.
- Do not drive a nail in, hit with a hammer, or stamp on the pack. Otherwise, the pack may be deformed and short-circuited, resulting in overheating, explosion, or fire of the pack.
- Do not solder the pack directly. Heat applied during soldering may damage the insulator of the safety vent and mechanism, resulting in overheating, explosion, or fire of the pack.

© 2026 Hoymiles Power Electronics Inc. All rights reserved.

- Do not disassemble or alter the pack. The pack employs a safety mechanism and a protection device to avoid any danger. If they are damaged, the pack might overheat, explode, or catch fire.
- Do not put the pack in a microwave oven or a pressure cooker. Sudden heat may damage the sealing of the pack and may cause overheating, explosion, or fire of the pack.
- Do not leave the pack in a charger or equipment if it generates an odour and/or heat, changes color and/or shape, leaks electrolytes, or encounters any other abnormality. In such a case, immediately take the pack out of the charger or equipment and keep it away from fire. Otherwise, the pack might overheat, explode, or catch fire.
- Stop charging or using the battery after the battery reaches its lifetime; otherwise, the battery might cause overheating, explosion, or fire.
- Do not use the pack beyond specified conditions. Otherwise, the pack might encounter overheating, damage, or performance deterioration.
- Read the instructions regarding the installation and operation to avoid damages due to incorrect operations.
- The battery may have insufficient power capacity after long storage.
- Knockoff or counterfeit battery.
- Any inconsistency among serial number, model number, and product code.

© 2026 Hoymiles Power Electronics Inc. All rights reserved.

12 Technical Datasheet

Model	LB-16D-G3
System Data	
Battery type	$LiFePO_4$
Rated capacity (Ah)	314
Total energy (kWh)	16
Rated voltage (V)	51.2
Voltage range (V)	44.8-58.4
Max. continuous charging/discharging current (A)	157
Peak charging/discharging current (A)	235 (10s)
Communication	CAN
Recommended depth of discharge (DOD)	90%
Max. parallel quantity	16
Protection	
Overvoltage and undervoltage protection	Integrated
Overcurrent protection	Integrated
Overtemperature and undertemperature protection	Integrated
DC breaker	Integrated
Heating	Optional
General	
Dimensions (W × H × D [mm])(1)	410 × 886 × 236
Weight (kg)(1)	115
Installation Environment	Indoor / Outdoor
Mounting	Wall-mounted / Floor-standing
Wall-mounted bracket / Wheels (4 pcs)	Optional
Charging temperature (°C)	0 to +55 (-20 to +55 with optional heating)
Discharging temperature (°C)	-20 to +55
Protection degree	IP65
Cooling	Natural convection
Altitude (m)	≤2000
Cycle life (25°C, 0.5C)	8000 Cycles, 90% DOD, 70% EOL
Certification	IEC 62619, UN 38.3, CE-EMC
Warranty(2)	5-10 Years

(1) The actual dimensions and weight may differ. For details, please contact Hoymiles sales.
(2) Please refer to Hoymiles Warranty Terms & Conditions for more details.

© 2026 Hoymiles Power Electronics Inc. All rights reserved.

Hoymiles Power Electronics Inc.

Floor 6, Building 5, 99 Housheng Road,
Gongshu District, Hangzhou 310015 P. R. China

+86 571 2805 6101

hoymiles.com

service@hoymiles.com
support@hoymiles.com